DECK HANDLING SOLUTIONS

MELCAL

www.melcal.com

DESIGN AND ENGINEERING

PRODUCTION AND ASSEMBLY

TESTING AND COMMISSIONING

SERVICE AND LIFE CYCLE SUPPORT

EQUIPMENT RENTAL

ABOUT US

MELCAL designs and manufactures advanced deck handling solutions and provides professional life cycle services for the marine and offshore industry.

Our regional offices work together with competent local sales and service partners to support shipyards, ship designers, ship owners, and operators worldwide. MELCAL offers expert consultation, advanced deck handling solutions and life cycle services, geared towards maximing equipment safety, reliability and performance.

Our experience, global reach and key references in all marine and offshore industry segments, make MELCAL your first choice partner for advanced deck handling solutions.

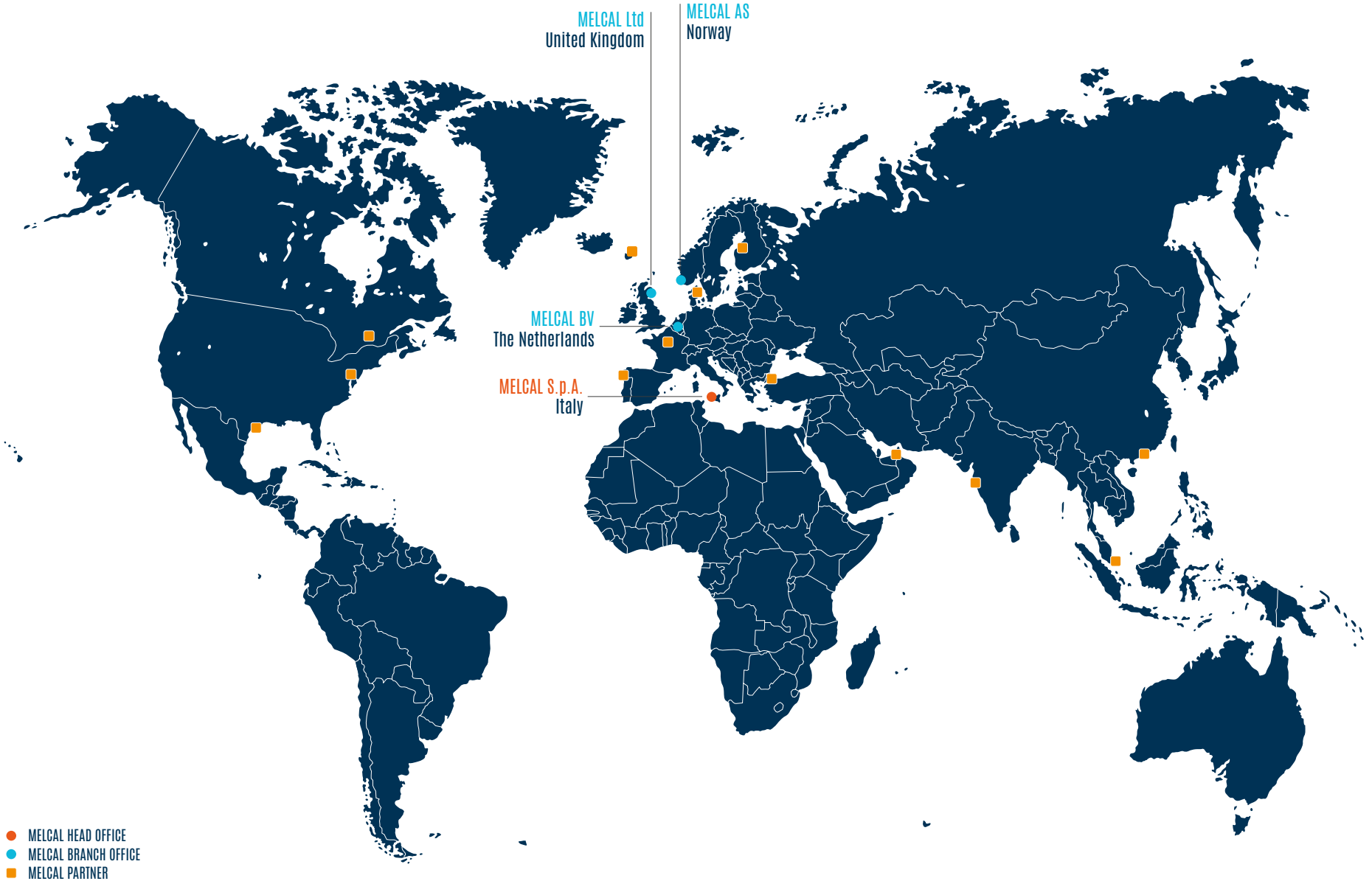
MELCAL Ltd
United Kingdom
MELCAL AS
Norway
MELCAL BV
The Netherlands
MELCAL S.p.A.
Italy
MELCAL HEAD OFFICE
MELCAL BRANCH OFFICE
MELCAL PARTNER

MELCAL
MAX SWL 12.6t - 4.45m
MIÐVÍK
KLAKSVÍK

XPOU

INDUSTRY SOLUTIONS

MELCAL supplies quality deck handling solutions, including modern lifting appliances, winches and custom deck handling equipment.

Our equipment portfolio is built on MELCAL's deeply rooted tradition in engineering, proven design principles and ISO manufacturing standards. The flexible, scalable platform of our standard equipment series allows us to furnish many different configurations, sizes and capacities competitively. MELCAL's custom deck handling equipment is engineered and built to client specifications. Our solid engineering competence and dedicated project organization facilitate professional client engagement from project conceptualization to equipment delivery and commissioning on-site.

Deck handling solutions manufactured and serviced by MELCAL are safe to use, operator friendly and ready to deliver true performance, independent of their application or area of installation.

MARKET SEGMENTS

OFFSHORE SUPPORT

DREDGING

CRUISE

NAVY

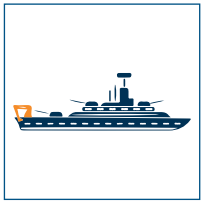

RESEARCH

OFFSHORE WIND

FISHING & FISH FARMING

OIL & GAS

OPERATING APPLICATION

SHIPBOARD (HARBOUR)

OFFSHORE

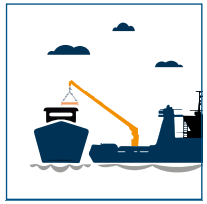

SUBSEA

AMBIENT TEMPERATURE

ARCTIC

STANDARD (- 20°C/ +40°C)

TROPICAL

SWL MODE

CARGO LIFT

PERSONNEL LIFT

MAN RIDING

APPLICATION AND OPERATION

MELCAL's advanced deck handling solutions are used for a variety of marine, offshore and subsea operations.

At MELCAL we understand and act upon the industry's challenges: the growing demand for electrification of equipment, the reduction of emissions in environmentally sensitive areas, the increasing importance of motion compensated lifts and mission critical handling operations in extreme conditions. MELCAL incorporates state-of-the-art technology to stretch known operational limits, without compromising safety, reliability and performance.

LIFTING AND HANDLING EQUIPMENT

MELCAL lifting and handling appliances are designed and manufactured for safe and precise operations, no matter the application or area of installation. Our specialists are committed to understanding the operational requirements of our clients to provide the best possible consultation, equipment, and services.

Our pragmatic approach to design and our modular production system allow us to furnish lifting and handling appliances for diverse applications. MELCAL heavy-duty cranes can be selected for lifting operations in challenging locations and are designed to deliver consistent performance in the harshest environmental conditions imaginable.

EQUIPMENT

- Stiff boom cranes
- Telescopic boom cranes
- Jib boom cranes
- Jib telescopic boom cranes
- Foldable knuckle telescopic boom cranes
- Knuckle telescopic boom cranes
- Subsea cranes
- Pipe and hose handling cranes
- Cherry picker cranes
- Davit cranes
- Roof cranes
- A-frames
- Containerized cranes
- Fish feed unloaders
- Cargo and personnel lifting winches
- Electro-hydraulic and Diesel-hydraulic power units

MELCAL

Range from 8,5 to 5000 mt

MODEL	MAX OUTREACH RANGE [m]	SWL RANGE [t]	CRANE WEIGHT RANGE [t]	MAX MOMENT [mt]
SL8	3 - 8	2 - 0,5	1,5 - 2	8,5
SL15	3 - 10	4 - 1	2 - 2,5	16
SL20	3 - 12	4,5 - 1	3 - 3,5	24
SL28	4 - 13	5,5 - 1	3,5 - 4,5	28
SL35	5 - 14	5 - 1	4 - 5	35
SL50	5 - 16	8 - 1,5	5 - 6	54
SL80	5 - 18	13 - 2	6,5 - 7,5	85
SL120	8 - 20	12 - 2,5	9 - 11,5	130
SL150	10 - 20	12 - 4	12 - 14	170
SL250	10 - 22	18 - 4,5	16,5 - 21,5	255
SL350	10 - 25	26 - 4,5	21,5 - 28	360
SL500	12 - 30	34 - 7	26 - 33	550
SL800	12 - 35	52 - 7,5	37 - 48	830
SL1200	12 - 40	80 - 10	45 - 62	1250
SL1500	12 - 40	100 - 12,5	52 - 74	1550
>SL1500	15 - 55	TBD	TBD	5000

MELCAL SL stiff boom cranes are built for precise lifting operations, are reliable and safe to use for onboard and ship-to-ship lifting operations in different sea states.
The straightforward design of our pedestal mounted SL stiff boom cranes poses no limits on their versatility or range of applications. The crane column and box boom make for a robust structure that delivers impressive lifting capacity, outreach and handling performance.

MELCAL SL stiff boom cranes are available in different boom lengths for common cargo handling, service and offshore applications. Each SL stiff boom crane can be configured or purpose-built to match our client's specifications with a selection of accessories and certification by all major classification societies.

Our installed base can be found onboard a variety of vessel types and offshore units, including dredgers, sub stations, jack-ups and wind farms.

This crane selection table lists the Safe Working Load and Maximum Moment for ship board lifting operations only.
For offshore operations, the Dynamic Amplification Factor, the Sea State and specific Class requirements need to be considered for selection of the appropriate model.

MELCAL

Range from 8,5 to 5000 mt

MODEL	MAX OUTREACH RANGE [m]	SWL RANGE [t]	CRANE WEIGHT RANGE [t]	MAX MOMENT [mt]
TL8	3 - 8	2 - 0,5	2 - 2,5	8,5
TL15	5 - 10	2,5 - 1	2 - 2,5	16
TL20	6 - 11	3 - 1	3 - 4	24
TL28	6 - 15	3,5 - 0,5	4 - 5	28
TL35	6 - 15	4,5 - 0,5	4 - 6	35
TL50	6 - 16	6,5 - 1	5 - 7	54
TL80	6 - 18	10,5 - 1,5	7 - 9	85
TL120	8 - 20	11,5 - 2	10 - 13	130
TL150	10 - 20	11,5 - 3	13 - 16	170
TL250	10 - 21	17 - 3,5	18 - 24	255
TL350	10 - 25	25 - 3	23 - 32	360
TL500	12 - 30	33 - 5	28 - 38	550
TL800	12 - 35	50 - 5	38 - 55	830
TL1200	20 - 40	41 - 6,5	53 - 71	1250
TL1500	20 - 40	50 - 7,5	62 - 85	1550
>TL1500	20 - 55	TBD	TBD	5000

MELCAL TL telescopic boom cranes are ideal for those seeking lifting capacity, outreach and handling performance in areas that cannot accommodate a stiff boom design. Our TL telescopic boom cranes combine their durable and space-saving design with low maintenance requirements and maximum operational availability.

MELCAL manufactures telescopic cranes in different sizes and capacities for diverse shipboard and offshore applications. Each crane can be configured and fitted with a plenitude of available options, and certified by all major classification societies.

This crane selection table lists the Safe Working Load and Maximum Moment for ship board lifting operations only.
For offshore operations, the Dynamic Amplification Factor, the Sea State and specific Class requirements need to be considered for selection of the appropriate model.

MELCAL

Range from 24 to 5000 mt

MODEL	MAX OUTREACH RANGE [m]	SWL RANGE [t]	CRANE WEIGHT RANGE [t]	MAX MOMENT [mt]
JL20	5 - 11	3,5 - 1	3 - 3,5	24
JL28	5 - 14	4 - 0,5	3,5 - 5	28
JL35	6 - 15	4 - 0,5	4 - 6	35
JL50	6 - 16	6,5 - 1	5 - 7	54
JL80	6 - 18	10,5 - 1,5	7 - 8,5	85
JL120	8 - 20	11,5 - 2	10 - 13	130
JL150	10 - 20	11,5 - 3	13 - 15,5	170
JL250	10 - 22	17,5 - 3,5	18 - 24	255
JL350	10 - 24	25,5 - 4	23 - 31	360
JL500	12 - 30	32,5 - 5	28 - 38	550
JL800	12 - 35	51 - 5,5	39 - 54	830
JL1200	20 - 40	41 - 7	53 - 70	1250
JL1500	20 - 40	50 - 8	60 - 85	1250
>JL1500	20 - 50	TBD	TBD	5000

MELCAL JL jib boom cranes offer smooth cargo handling capabilities and excellent operational performance. The jib ensures high levels of control during shipboard and offshore lifting operations. Our JL cranes combine a robust design, superior components and excellent workmanship with safety and control systems that operators can rely on.

Each JL jib boom crane can be configured and customized to client specifications by drawing upon an array of available systems and accessories, such as an integrated hydraulic power pack, tiltable boom head, secondary winch or active heave compensation system. MELCAL JL jib boom cranes can be certified by all major classification societies.

This crane selection table lists the Safe Working Load and Maximum Moment for ship board lifting operations only.
For offshore operations, the Dynamic Amplification Factor, the Sea State and specific Class requirements need to be considered for selection of the appropriate model.

MELCAL

Range from 35 to 5000 mt

MODEL	MAX OUTREACH RANGE [m]	SWL RANGE [t]	CRANE WEIGHT RANGE [t]	MAX MOMENT [mt]
JLT35	6 - 15	4 - 0,5	4 - 6	35
JLT50	6 - 16	6,5 - 1	5 - 7	54
JLT80	6 - 18	10,5 - 1,5	7 - 9	85
JLT120	8 - 20	11,5 - 1,5	10 - 13,5	130
JLT150	10 - 20	11,5 - 3	13 - 16,5	170
JLT250	10 - 22	17,5 - 3	18,5 - 25	255
JLT350	10 - 25	25 - 2,5	24 - 34	360
JLT500	12 - 30	32,5 - 4,5	29 - 40	550
JLT800	12 - 35	50,5 - 4,5	40 - 57	830
JLT1200	20 - 40	40 - 5,5	54 - 73	1250
JLT1500	20 - 40	50 - 6,5	63 - 88	1550
>JLT1500	20 - 50	TBD	TBD	5000

MELCAL JLT jib telescopic boom cranes feature one or more telescopic extensions on the crane jib to complement precise handling and exceptional performance with added outreach.

Typical marine applications for JLT jib telescopic boom cranes include provision, service and cargo handling operations in shipboard or offshore conditions. MELCAL offers certification by all major classification societies in combination with selected systems and accessories to customize each crane to specification.

This crane selection table lists the Safe Working Load and Maximum Moment for ship board lifting operations only.
For offshore operations, the Dynamic Amplification Factor, the Sea State and specific Class requirements need to be considered for selection of the appropriate model.

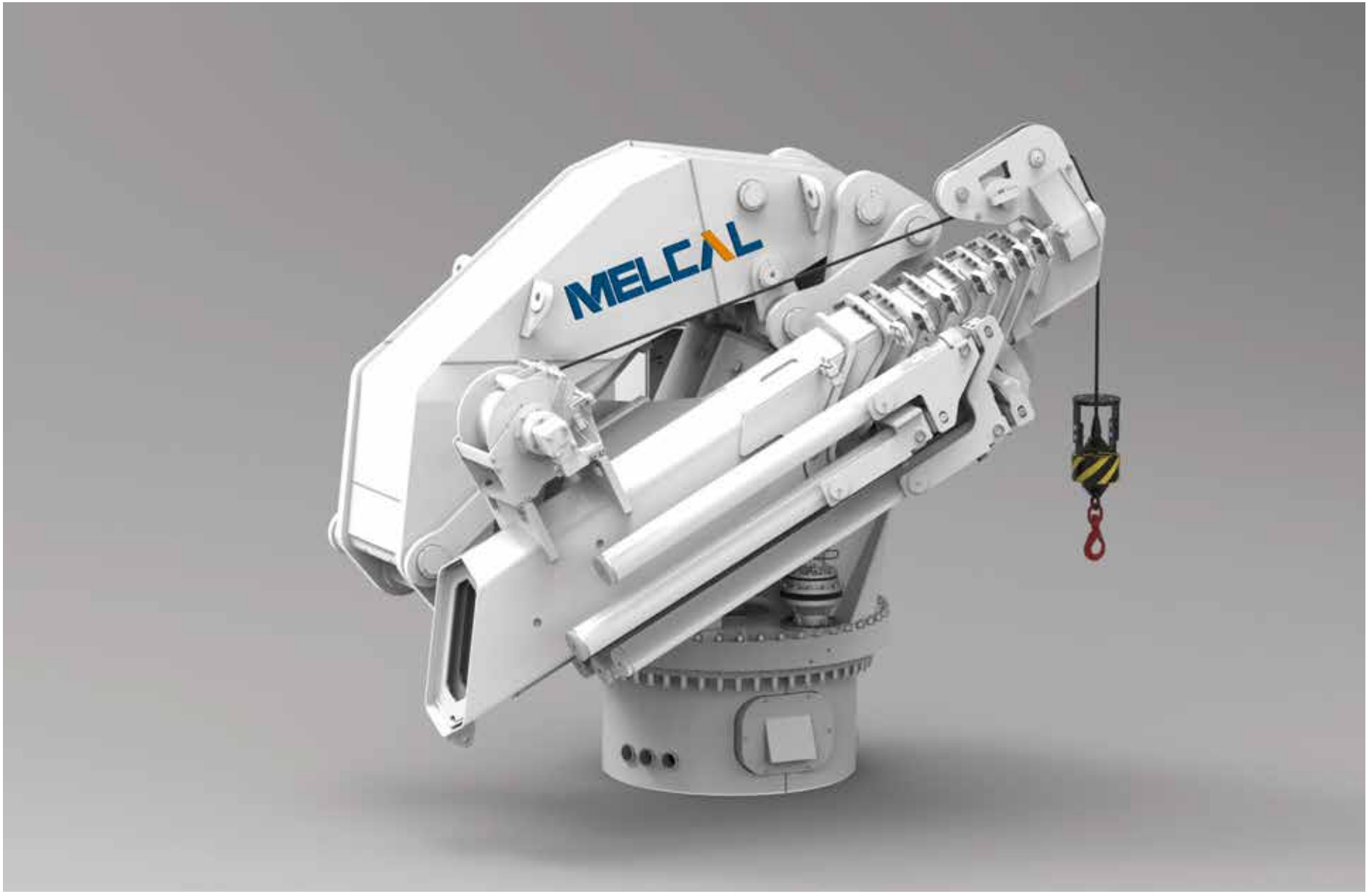
MELCAL

Range from 13 to 130 mt

MODEL	MAX OUTREACH RANGE [m]	SWL RANGE [kg]	CRANE WEIGHT RANGE [t]	MAX MOMENT [mt]
FL13	6 - 14	1900 - 510	1,8 - 2,2	13
FL15	6 - 14	2120 - 610	1,8 - 2,2	16
FL18	6 - 16	2550 - 540	2,1 - 2,8	18
FL20	6 - 16	2830 - 650	2,1 - 2,8	20
FL23	6 - 16	3150 - 780	2,1 - 2,8	23
FL25	6 - 16	3950 - 820	2,4 - 3,3	24
FL28	6 - 16	4150 - 910	2,4 - 3,3	28
FL30	6 - 21	4850 - 600	2,8 - 4,2	30
FL35	6 - 21	5200 - 750	2,8 - 4,2	36
FL40	6 - 21	6650 - 900	4,2 - 5,9	42
FL50	6 - 20	7500 - 1080	4,2 - 5,9	50
FL60	6 - 22	8920 - 1160	5,8 - 8,2	60
FL70	6 - 22	9700 - 1380	5,8 - 8,2	70
FL80	6 - 22	10650 - 1600	5,8 - 8,2	85
FL110	5,5 - 22	12500 - 2500	8,5 - 11,5	110
FL130	5,5 - 22	15500 - 3050	8,5 - 11,5	130

MELCAL FL foldable knuckle telescopic boom cranes are multi-functional lifting devices that combine a compact design with impressive outreach and true handling performance. Their versatility makes our FL cranes suitable for precise lifting operations and for many marine and offshore applications. MELCAL FL foldable knuckle telescopic boom cranes facilitate man-riding operations and cargo lifts onboard offshore installations, service vessels, workboats, fishing vessels and cruise ships.

All foldable knuckle telescopic boom cranes can be customized, using different materials, accessories and arrangements, including skid mounted and fully containerized configurations. Our compact foldable knuckle telescopic boom cranes can be designed and certified to comply with the rules and regulations of the world's major classification societies.

This crane selection table lists the Safe Working Load and Maximum Moment for ship board lifting operations only.
For offshore operations, the Dynamic Amplification Factor, the Sea State and specific Class requirements need to be considered for selection of the appropriate model.

MELCAL

Range from 90 to 3000 mt

MODEL	MAX OUTREACH RANGE [m]	SWL RANGE [t]	CRANE WEIGHT RANGE [t]	MAX MOMENT [mt]
KL90	8 - 20	9,7 - 1,2	10 - 13,5	90
KL120	8 - 20	11,5 - 1,5	10 - 13,5	130
KL150	10 - 20	11,5 - 3	13 - 16	170
KL250	10 - 22	17,5 - 3	18,5 - 25	255
KL350	10 - 25	25 - 2,5	23,5 - 33	360
KL500	12 - 30	32,5 - 4,5	28,5 - 39	550
KL800	12 - 35	50 - 4,5	40 - 56	830
KL1200	20 - 40	40 - 5,5	54 - 73	1250
KL1500	20 - 40	50 - 7	62 - 87	1550
>KL1500	20 - 40	TBD	TBD	3000

MELCAL KL knuckle telescopic boom cranes are designed specifically for heavy duty lifting applications. Our KL cranes combine smooth handling capabilities with straightforward serviceability.

The articulation of the crane boom results in a compact, yet versatile design, and the telescopic extensions offer an impressive outreach for safe and efficient cargo handling. MELCAL furnishes KL cranes suitable for lifting operations in different sea states, safe zones, splash zones and in arctic or tropical conditions. We offer certification by all major classification societies and a broad set of available accessories to ensure regulatory compliance and deliver equipment that is fit for purpose.

This crane selection table lists the Safe Working Load and Maximum Moment for ship board lifting operations only.
For offshore operations, the Dynamic Amplification Factor, the Sea State and specific Class requirements need to be considered for selection of the appropriate model.

SUBSEA CRANES

AHC SERIES

MELCAL AHC active heave compensated cranes are designed for ship-to-ship transfer of cargo and subsea lifting operations up to 3,000 meters water depth. Primary and secondary active heave compensation systems control oscillating motions and allow for very smooth lifts and landings in different sea states.

Certification by all major classification societies and a selection of available options and accessories ensure full compliance with the operational requirements of our clients.

PIPE AND HOSE HANDLING CRANES

MPH SERIES

MELCAL MPH pipe handling cranes are designed specifically for controlled transfer of tubular cargo on catwalks, conveyors and offshore units.

We offer certification by major classification societies and a range of accessories for all pipe handling cranes to ensure compliance with the operational requirements and expectations of our clients.

CHERRY PICKER CRANES

MCP SERIES

MELCAL MCP cherry pickers allow for maintenance operations and inspections in hard-to-reach areas. Typically, our cherry pickers are applied for offshore stabbing operations, as well as for personnel lifts and general cargo handling operations. Cherry pickers can be installed near moon-pools, on derricks and skidding systems.

MCP cherry pickers can be certified by all major classification societies and can be customized with a full range of accessories to comply with different operational requirements.

DAVIT CRANES

DL SERIES

MELCAL delivers a range of compact electric davit cranes made with high-quality components and seawater resistant materials to ensure excellent operational performance, reliability and a long service life.

Our fully electric DL davit cranes are designed to transfer spare parts and materials between offshore wind platforms and supply vessels. MELCAL davits can also be found onboard modern cruise vessels. Their high quality NORSOK M501 coating system, hot dip galvanized structural bolts and IP66/67 rated electrical components offer high levels of protection against corrosive environments.

ROOF CRANES

MRC SERIES

MELCAL MRC roof cranes are typically installed in confined areas and vessel hangars for handling big bags and zodiacs.

Roof cranes are designed to leave ample clearance and indoor lifting height and can be fitted with a slew bearing for increased manoeuvrability.

A winch or simple hoist with manual, hydraulic or electric extensions can be applied to increase their reach. Depending on the MRC's application and our client's requirements, we offer certification by major classification societies and a range of accessories to allow for specific configurations.

A-FRAMES

MAF SERIES

A-frames are designed for offshore load handling, subsea lifting operations and the launch or recovery of special tools and equipment.

MELCAL a-frames can be supplied with a hydraulic power pack, radio remote control, telescopic legs and additional wire sheaves.

MELCAL offers certification by major classification societies and various degrees of customization to ensure compliance with the operational requirements and expectations of our clients.

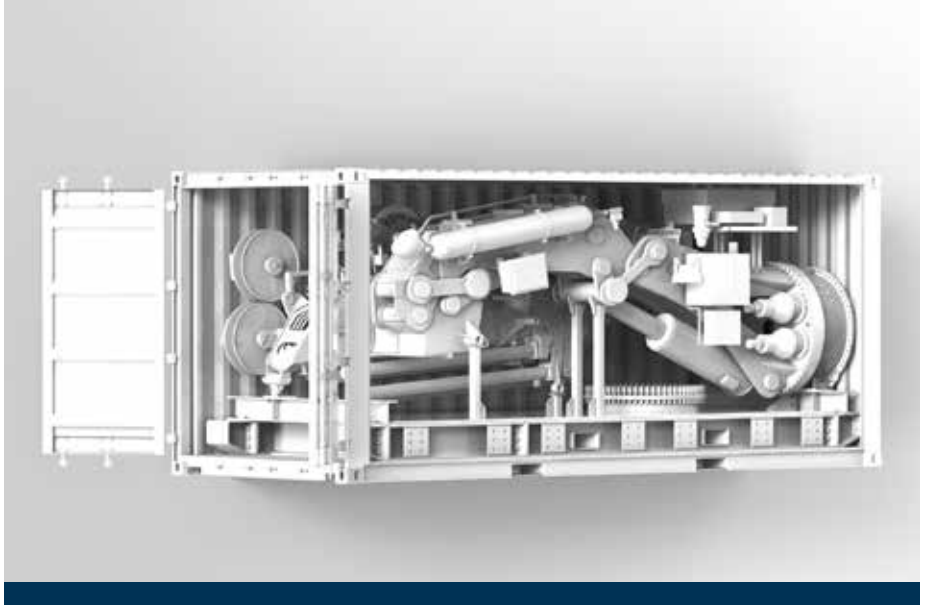

CONTAINERIZED CRANES

When clients prefer to change the location of lifting appliances onboard or intend to share equipment among multiple vessels, special emphasis is put on quick (de)mobilization and intermodal transport.

MELCAL builds foldable knuckle telescopic boom cranes with an offshore working skid, suitable for quick deployment on deck, horizontal stowage and transport of the complete assembly inside a standard 20” container.

FISH FEED UNLOADERS

JLS SERIES

MELCAL fish feed unloaders feature an articulated boom with a fully integrated conveyor system to efficiently deliver fish food to fish farming barges. The fish feed unloader delivers up to 200 tons of dry pellets per hour to fish farms via an elevator connected to the storage tanks onboard the transport vessel.

A tiltable, telescopic pipe is mounted on the boom tip, enabling operators to accurately position the pipe over the tank hatch.

CARGO AND PERSONNEL LIFTING WINCHES

MW SERIES

MELCAL's electric and hydraulic winches can operate in the most demanding environments and are typically applied for lifting and pulling applications, including onshore pull-ins and subsea operations. A compact design guarantees versatility for different applications.
Our winches are delivered with adjustable line pull settings, fully tested and ready for installation.

MELCAL supplies man-riding winches, featuring a secondary brake, to comply with the rules and regulations for personnel lifting.

ELECTRO-HYDRAULIC AND DIESEL-HYDRAULIC POWER UNITS

HPU SERIES

MELCAL's stand-alone electro-hydraulic and diesel driven power units are designed for handling equipment on land and offshore. Our power units feature a robust space saving design and a local control panel with an emergency stop button. MELCAL HPUs are supplied with lifting points for safe handling according to DNV 2.7 and with a certified lifting rig.
Our diesel driven HPUs feature modern engines to meet the latest NOx emission standards. MELCAL offers various degrees of customization by drawing upon an extensive range of options and accessories, including those required to certify power units for operations in ATEX zones or environmentally sensitive areas.

SNA-GD

Allseas

EQUIPMENT FEATURES

STANDARD FEATURES AND BENEFITS

- Surface protection according to NORSOK M-501 system 1/ISO 12944 CX;
- Stainless steel pipes;
- Nickel Chromium cylinder piston rods;
- Mild Steel fittings covered with adequate protection;
- Hoses and electric cables identification tags according to hydraulic/ electric diagram;
- AISI 630 stainless steel pins;
- AISI 316L Stainless steel grease nipples;
- Engineered to client specific requirements;
- Easy access to each component for maintenance and inspection;
- Functional design for operator comfort;
- Continuous crane rotation;
- Simultaneous operation of two or more functions;
- Crane movement load holding valves;
- Low power consumption;
- Load limiting device;
- NDTs on the equipment structure;
- Weight optimizationed;
- SMDL (supplier master document list);
- Loose gear certificates;
- Declaration of conformity;
- FAT (factory acceptance test).

OPTIONAL FEATURES

- Metalizing marine treatment;
- Hot Dip Galvanizing;
- Special cylinder rod protection (ceramic coating, stainless steel, laser cladding);
- NACE or FROSIO painting certificate;
- External or integrated hydraulic power pack;
- Automatic or manual centralized greasing system;
- Fiber rope solutions;
- Data logging;
- Slack wire rope detection system;
- Customized SMDL (supplier master document list);
- Anti-collision system;
- Shock absorber system;
- Winterization and arctic package;
- Emergency Operation System (EOS);
- ATEX Zone 1 and 2 execution;
- Lifting of personnel and man-riding application;
- Crane certification according to main Class societes rules and regulations;
- Remote diagnostics.

ACCESSORIES

- Stainless steel fittings;
- Lebus/ grooved winch drum;
- Loose control stand;
- Radio remote control;
- Operator cabin;
- Warning and working lights;
- Boom tip camera;
- Programmable Logic Controller (PLC);
- Gas and fire detectors;
- Load monitoring system (LMS);
- Overload protection systems (MOPS, AOPS, LOPS);
- Constant tension systen (CT);
- Active Heave Compensation (AHC);
- Swiveling boom tip sheaves;
- Tugger winches;
- Sea water/ fresh water/ air oil cooler;
- Other accessories.

MELCAL

DESIGN AND CERTIFICATION

MELCAL's experienced project organization and dedicated project managers facilitate the entire approval process for certifications of all major class societies or according to Machine 2006/42/EC or ATEX 2014/34/EU directives. All equipment can be designed, manufactured, painted and tested in-house to meet the standards of EN 13852, API, NORSOK, BP, BS, LOLER, SOLAS, IMO, MED, NMD, ATEX, NEC, IEC, including the design rules of leading classification societies, such as RMRS, DNV, LRS, ABS, BV, CCS, RINA and others.

MELCAL deck handling solutions can be built to meet specific requirements for operation in ATEX Zones 1 or 2, Gas groups IIA or IIB and areas with temperature classification T1 to T4. Being an API licensed manufacturer, MELCAL applies the registered API Monogram to handling solutions that are built in compliance with API Spec Q1 standards and specific requirements for the Oil & Gas industry.

Our advanced deck handling solutions are fit for purpose, reliable and safe to use, combining energetic efficiency with impressive operational performance.

MELCAL
РОСМОРРЕЧФЛОТ
RESCUER

SAFETY

Working with heavy duty marine and offshore handling equipment poses many hazards. Unsafe working practices may result in injuries, fatalities and costly damage to vessels and cargo. All equipment manufactured by MELCAL complies with the latest industry standards to ensure high levels of safety. Proven design practices such as the introduction of safety factors and multiple safety barriers are indispensable in our design process.

MELCAL's experienced engineers utilize techniques, such as Probabilistic Risk Analysis PRA and failure mode analysis, to design safe equipment and reduce risk for the crane operator. MELCAL strictly adheres to basic design practices and standards, aimed at dealing with risk in the probabilistic sense, and offers selected safety systems to aid and protect the operator.

DOCUMENTATION

MELCAL's ISO 9001 DNV GL quality management system ensures the delivery of quality workmanship and high-level documentation.

Our documentation complies with Norsok NS5820 standards and offers coherent and detailed information on equipment operation, maintenance and preservation.

MELCAL offers a standard SMDL with the following documents:

- LOAD DIAGRAM;
- PEDESTAL INTERFACE;
- ELECTRIC AND HYDRAULIC DIAGRAMS;
- INSTALLATION PROCEDURE;
- COMMISSIONING PROCEDURE;
- USER AND MAINTENANCE MANUAL;
- LUBRICATION MAP;
- PACKING, PRESERVATION AND STORAGE INSTRUCTIONS;
- HANDLING PROCEDURE;
- MANUFACTURING RECORD BOOK;
- SPARE PARTS MANUAL;
- FAT PROCEDURE.

Special documentation can be supplied by MELCAL on client request.

All components, including hydraulic hoses, valves, cables and electric cabinets are duly labelled for easy identification and traceability in the unlikely event of breakdown.

Labels and nameplates are either furnished in stainless steel or made from durable trafolite material to resist corrosion.

SERVICE AND MAINTENANCE

Our advanced deck handling solutions are often installed and used as mission critical equipment. Due to their constant exposure to loads and operations in saline, corrosive environments, regular maintenance, service and inspection remain of paramount importance to ensure lasting equipment integrity, safety and performance.

Our skilled field services team and our competent service partners around the world are trained, duly certified and authorized to render OEM services and to conduct statutory inspections on all deck handling solutions furnished by MELCAL.

MELCAL's service division is strategically located, staffed and equipped to offer professional life cycle support to engage in comprehensive service and maintenance agreements.

- STATUTORY INSPECTIONS;
- CONVERSIONS MODIFICATIONS AND UPGRADES;
- LOAD TESTING;
- INSTALLATION AND COMMISSIONING;
- 24/7 OFFICE SUPPORT;
- SPARE PARTS;
- FLEET SERVICE AGREEMENTS.

service@melcal.com

24/7 +39 0924 24241

RENTAL EQUIPMENT

Our rental division offers an extensive range of modern lifting appliances and handling equipment for short- or long-term hire. MELCAL's well maintained rental fleet includes foldable knuckle telescopic boom cranes, power packs and winches. Our clients stand to benefit from rapid deployment times and can rely on competent operational and service support, rendered by a leading supplier of marine and offshore handling solutions.

Qualified service engineers facilitate the installation and (de) commissioning of our rental equipment and provide training for crane operators. Upon request, MELCAL can mobilize experienced crane operators for the duration of the rental period.

- RAPID DEPLOYMENT ON-SITE;
- PRECISE PROJECT COST CONTROL;
- NO STORAGE OR MAINTENANCE COSTS;
- EASE OF MOBILIZATION AND TRANSPORTATION;
- 24/7 TECHNICAL SUPPORT;
- EXPERIENCED OPERATORS.

rental@melcal.com

24/7

MELCAL
MELCAL

REFERENCES

Contacts

Email: sales@melcal.com
Website: www.melcal.com

Email: rental@melcal.com
Email: service@melcal.com

Social Media

Linkedin: melcal
Instagram: melcalworldwide
Facebook: melcalworldwide

MELCAL